REGIONAL DISTRICT OF KITIMAT-STIKINE

BY-LAW NO. 195

A by-law to regulate the subdivision of land in Electoral Area 'E' of the Regional District of Kitimat-Stikine.

WHEREAS pursuant to section 729 of the Municipal Act the Regional District is empowered to regulate and prescribe standards for the subdivision of land.

NOW THEREFORE the Board of Directors of the Regional District of Kitimat-Stikine in open meeting assembled HEREBY ENACTS AS FOLLOWS:

1. This by-law may be cited as the "Regional District of Kitimat-Stikine Electoral Area 'E' Subdivision and Development Control By-law" No. 195, 1983".

2. The text entitled "Thornhill Subdivision and Development Control By-law" and Schedules A, B, C, D, and E attached thereto comprise the content of the by-law.

READ a first time this 6 day of August, 1983.

READ a second time this 6 day of August, 1983.

READ a third time this 6 day of August, 1983.

RECONSIDERED AND FINALLY ADOPTED the 10 day of December, 1983.

Lee Ellis
Chairman

Secretary-Administrator

THORNHILL SUBDIVISION AND DEVELOPMENT CONTROL BY-LAW

Regional District of Kitimat-Stikine Electoral Area 'E'

Subdivision and Development Control By-law No. 195

Thornhill Subdivision & Development Control By-law

TABLE OF CONTENTS

		Page No
1.0.	Title	1
2.0	Short Title	1
3.0	Application	1
4.0	Purpose	1
5.0	Definitions	1
6.0	Conformity with this Bylaw	2
7.0	Severance	2
8.0	Other Regulations	2
9.0	Completion of Works before Approval	3
10.0	Minimum Parcel Size	3
11.0	Minimum Frontage Requirement	3
12.0	Required Services	3
13.0	Approval Procedures	4
14.0	Highway Standards	4
15.0	Water Distribution	4
16.0	Sewage Collection and Disposal	4

Schedules

A.	Minimum Parcel Sizes	5
B.	Minimum Frontage Requirements	6
C.	Required Services	7
D.	Approval Procedures	8
E.	Water Systems	13

1.0 Title:

This by-law may be cited as the "Regional District of Kitimat-Stikine Electoral Area 'E' Subdivision and Development Control By-law.

2.0 Short Title:

This by-law may also be cited in its short form as the "Thornhill Subdivision and Development Control By-law", and further referred to herein as "this By-law".

3.0 Application:

This By-law shall be applicable to Electoral Area 'E' of the Regional District of Kitimat-Stikine.

4.0 Purpose:

The purpose of this By-law is to

(a) regulate the subdivision of land, especially the dimensions, shape and arrangement of parcels of land so created, and to ensure that access to each may be obtained in a safe and convenient manner and to preserve the amenity and well-being of the community as a whole by requiring that subdivisions proceed in a safe, orderly, and economical manner and that each is suitable to the use intended.

(b) to indicate the required services and servicing standards for the various types of land.

5.0 Definitions:

In this By-law, unless the text otherwise specifies

"authority having jurisdiction" means the agency, or officers of the agency with the legal authority to enforce provisions of provincial statutes, orders, regulations pursuants to the statutes, or the by-laws of local governments;

"natural boundary" means the high water mark shown on the plan of survey most recently filed in the Land Title office, or if the plan of survey is not available with respect to the body of water, then the visible high water mark of any lake, river, stream or other body of water where the presence and action of the water are so common and usual and so long continued in all ordinary years as to mark upon the soil of the bed of the lake, river, stream or other body of water a character distinct from that of the banks thereof, in respect to vegetation, as well as in respect to the nature of the soil itself;

"Public Health Inspector" means person appointed as such, pursuant to the Health Act;

"Regional District" means the Regional District of Kitimat-Stikine;

"road frontage" means the portion of the perimeter of a parcel which borders a public right-of-way and on which the access to the lot is obtained.

"site area" means the minimum area of site required by the Thornhill Zoning By-law;

"standard specifications" means the latest available edition of standard specifications (ie. A.W.W.A., C.S.A., A.S.T.M., etc.);

"Subdivider" means same as "owner";

"Utility" means the utility system servicing the area of concern;

"works" means the improvements made to the subdivision including the installation of water, sewer, drainge, highways, and other required components of the subdivision.

6.0 Conformity of this By-law:

6.1 Land shall not be subdivided except in compliance with the provisions of this By-law.

7.0 Severance:

If any section, subsection, sentence, clause or phrase of this By-law is for any reason held to be invalid by the decision of any court of competent jurisdiction, the invalid portion shall be severed and the decision that is invalid shall not affect the validity of the remainder.

8.0 Other Regulations:

8.1 Nothing contained in this By-law shall relieve the owner of land proposed for subdivision from the responsibility to seek out and comply with other legislation and regulations applicable to his undertaking.

8.2 All requirements of the Subdivision Regulations 262/70 and amendments thereto pursuant to the Local Services Act shall be applicable and deemed inclusive provisions of this by-law except the portions indicated below:

(a) Sections 6.01, 6.02, and 6.03 shall be replaced by minimum parcel size requirements indicated in this by-law.

(b) Section 6.04 (b) shall not apply.

(c) Section 6.08 shall be replaced by minimum frontage requirements indicated in section 11.0 of this by-law.

8.3 Agricultural Land Reserve:

(a) Where land covered by this By-law has been designated as "Agricultural Land Reserve" by the British Columbia Land Commission, this By-law shall be binding only in so far as it is not, in any manner, in conflict with, inconsistent with, or repugnant to the Land Commission Act, the regulations thereunder, or any order of the Land Commission.

(b) Where land presently within the Agricultural Land Reserve is pursuant to the Land Commission Act, regulations made thereunder, or orders of the B.C. Land Commission:

(i) excluded from an Agricultural Land Reserve, or
(ii) exempted by the Land Commission Act, or
(iii) exempted by regulations made under the B.C. Land Commission Act, or an order of the B.C. Land Commission,

the provisions of this By-law shall be binding.

9.0 Completion of Works before Approval:

9.1 All works required to be constructed and installed at the expense of the owner of the land proposed to be subdivided pursuant to this By-law shall be constructed and installed to the standards prescribed in this By-law prior to the final approval of the Plan of Subdivision.

9.2 All works shall be completed to the property line so as to enable the continuation of the services to adjacent parcels.

10.0 Minimum Parcel Size:

10.1 No parcel shall be created which is smaller than the minimum parcel size permitted for that zone as indicated in Schedule 'A' of this By-law.

10.2 Any parcel of which any portion of the parcel is located in an OS zone shall be subdivided to suit the configuration of the land being subdivided.

10.3 Nothwithstanding the above, a parcel less than minimum parcel size requirement may be created as per section 6.11 of the Subdivision Regulations pursuant to the local Services Act.

11.0 Minimum Frontage Requirement:

11.1 No parcel shall be created in which the frontage is less than the minimum frontage requirement for that zone as indicated in Schedule 'B' of this By-law.

11.2 The Board of the Regional District may exempt a person from the minimum frontage requirements in accordance with Section 731(2) of the Municipal Act.

12.0 Required Services:

12.1 The services required for subdivision in each zone shall be as indicated in Schedule 'C'.

13.0 Approval Procedures:

13.1 The procedure for the approval of a proposed subdivision shall be in accordance with the approval procedures as indicated in Schedule 'D' of this By-law.

13.2 The authority having jurisdiction may enter upon the property at any time to ensure that the terms of the subdivision are being adhered to.

14.0 Highway Standards:

14.1 All new highways within the subdivision shall be cleared, graded, drained, surfaced, and constructed in accordance with the requirements of the applicable Provincial Regulations.

14.2 Drainage channels, culverts, bridges, or other works required to handle drainage shall be installed and constructed in accordance with the requirements of agency or agencies having jurisdiction.

15.0 Water Distribution:

15.1 Where a parcel proposed to be subdivided is in a zone which requires community water supply, the distribution system shall be designed, constructed, and tested in accordance with the standards and specifications set out in Schedule 'E' of this By-law or the requirements of the Ministry of Environment for a private water supply.

16.0 Sewage Collection and Disposal:

16.1 All community sewer systems shall be designed and constructed in accordance with the requirements of applicable Provincial Regulations.

SCHEDULE 'A': Minimum Parcel Size

ZONE	MINIMUM PARCEL SIZE WITH COMMUNITY SEWER	NO COMMUNITY SEWER
Ag[1]	16.0 ha.	16.0 ha.
Ru1	4.0 ha.	4.0 ha.
Ru2	1.0 ha.	1.0 ha.
Ru3	0.25 ha.	0.25 ha.
RL	1200 m^2	1200 m^2
R1	510 m^2	700 m^2
R2	510 m^2	700 m^2
RMH	2.0 ha.	2 ha.
RM-1	510 m^2	700 m^2
C-1	500 m^2	1000 m^2
C-2	1000 m^2	1000 m^2
C-3	1600 m^2	1600 m^2
RuM	1600 m^2	1600 m^2
M-1	1600 m^2	1600 m^2
M-2	2.0 ha.	2.0 ha.
P-1	1200 m^2	1200 m^2

SCHEDULE 'B': Minimum Frontage Requirements

ZONE	MINIMUM FRONTAGE
Ag	15% of the perimeter of the parcel to be created
Ru1	15% of the perimeter of the parcel to be created
Ru2	15% of the perimeter of the parcel to be created
Ru3	10% of the perimeter of the parcel to be created
RL	20 m. or 10% of the perimeter of the parcel to be created, whichever is greater
R1	16 m. or 10% of the perimeter of the parcel to be created, whichever is greater
R2	16 m. or 10% of the perimeter of the parcel to be created, whichever is greater
RMH	10% of the perimeter of the parcel to be created
RM-1	16 m. or 10% of the perimeter of the parcel to be created, whichever is greater
C-1	10% of the perimeter of the parcel to be created
C-2	10% of the perimeter of the parcel to be created
C-3	30 m. or 10% of the perimeter of the parcel to be created, whichever is greater
RuM	30 m. or 10% of the perimeter of the parcel to be created, whichever is greater
M-1	30 m. or 10% of the perimeter of the parcel to be created, whichever is greater
M-2	15% of the perimeter of the parcel to be created
P-1	10% of the perimeter of the parcel to be created

SCHEDULE 'C': Required Services

Services required for each zone shall be in accordance with the table below:

ZONE	DRAINAGE	PAVED STREETS	COMMUNITY WATER	STREET LIGHTS
Ag	X	0	0	0
Ru 1	X	0	0	0
Ru 2	X	0	X	0
Ru 3	X	X	X	X
RL	X	X	X	X
R 1	X	X	X	X
R 2	X	X	X	X
RMH	X	X	X	X
RM1	X	X	X	X
C-1	X	X	X	X
C-2	X	X	X	X
C-3	X	X	X	X
RuM	X	X	X	X
M-1	X	X	X	X
M-2	X	X	X	X
P-1	X	X	X	X
OS	0	0	0	0

service required X
service optional 0

SCHEDULE 'D': Approval Procedures

1.0 Application

1.1 Planning

(a) The Subdivider's proposed Plan of Subdivision shall comply with all existing Regional District By-laws and standard practices governing subdivision planning. The Plan of Subdivision shall indicate the desired zoning and use for each piece of property within the proposed subdivision, the number and approximate dimensions of each lot, and shall provide for public park, and playground areas with access, buffer, rights-of-way, and utility easements. Notwithstanding the generality of the foregoing, the Plan of Subdivision shall conform with the Thornhill Official Settlement Plan and other regulatory By-laws.

1.2 Information Required:

As per Subdivision Regulations pursuant to local Services Act.

2.0 Preliminary Approval:

2.1 Engineering Drawings:

(a) The authority having jurisdiction may require the subdivider to engage the services of a qualified professional engineer to prepare the Engineering Drawings, Contract Documents, Reports, Studies, and other engineering information which may be relevant to the development of the subdivision. Engineering drawings prepared and signed by utility companies in support of their works will be considered for acceptance.

(b) All drawings, specifications, and contract documents shall be submitted for the approval of the agency having jurisdiction prior to any drawings or documents being issued for construction.

(c) The authority having jurisdiction may require drawings to a specified scale and contours to any specified interval in order to evaluate the proposal. The authority having jurisdiction shall inform the Approving Officer in writing that the preliminary drawings as submitted are acceptable; or if they are not acceptable, the authority shall indicate where they are deficient.

2.2 Flagging:

The corners of any proposed parcel for which approval is being sought, or the location of places where any tests required for approval are taken, shall be clearly flagged if required by the agency having jurisdiction.

2.3 Issuance of Preliminary Approval:

Upon satisfaction that all relevant information and Agency approvals have been received and that the proposed subdivision meets all statutory and by-law requirements the Approving Officer shall give Preliminary Approval to the proposed subdivision.

3.0 Construction of Works:

3.1 Preliminary Survey and Layout:

The authority having jurisdiction may require the Subdivider to engage competent inspectors and survey personnel satisfactory to the authority having jurisdiction, to lay-out and inspect the works to be installed.

3.2 Materials:

(a) All materials installed by the Subdivider as part of the works of this subdivision shall be as approved by the authority having jurisdiction.

(b) The Subdivider, upon request from the authority having jurisdiction, shall submit prior to commencing construction on any phase of the subdivision, a complete list of the type of materials to be incorporated in the subdivision works. The materials list shall set out the type of materials to be incorporated in the works, the name of the manufacturer, a description of the material, its composition, the class or grade, the standard specification number and trade name for the material.

(c) At the request of the authority having jurisdiction, the Subdivider shall supply, at the Subdivider's sole cost, material samples for non-destructive or destructive testing. Should the material samples tested not comply with the specifications, the Subdivider shall be responsible for the cost of testing.

(d) If the Subdivider wishes to utilize materials which are not contained in the detailed materials specifications attached to this By-law, the Subdivider shall supply for the approval of the authority having jurisdiction, two copies of complete specifications listing full details of the material in question, the manufacturer, dimensions, absorption, chemical properties, strength, tolerance of manufacture, method of installation, test performance and all other pertinent information including the A.S.T.M. or A.W.W.A. specifications relating to the material. The authority having jurisdiction shall not be obligated to approve any material regardless of whether the material has received prior A.S.T.M. or A.W.W.A. approval.

3.3 Barricades and Detours:

The Subdivider shall provide all barricades, lighting, and signs to protect the public while the works are being installed. In order to maintain traffic movements with the least possible inconvenience, the Subdivider shall construct such detours and barriers as set out by the Motor Vehicle Act.

3.4 Offsets - Line and Grade:

The Subdivider shall be responsible to install the works included in the subdivision to the correct offset, line and grade as shown on the drawings approved by the authority having jurisdiction. Any discrepancies in the offset line or grade of any works installed by the Subdivider or his Contractors without authorized approval shall be made good at the expense of the Subdivider.

3.5 Inspection during Construction:

(a) The Subdivider shall be responsible to ensure that all works are constructed and installed to the approved standards and specifications.

(b) The Agency having jurisdiction in the works may order that a section or sections of works are not covered until the works have been inspected by that agency.

4.0 Final Approval:

4.1 Notification of Completion:

Upon satisfaction that the works have been completed and installed to the standards and specifications required, the Subdivider shall issue a Notification of Completion bearing his signature to the authority having jurisdiction.

4.2 Faulty Material or Workmanship Guarantee:

(a) The developer shall indemnify and save harmless the Regional District, or Utility Company, as the case may be, against all expenses and costs which may be incurred by the Regional District, or Utility Company as a result of faulty workmanship and defective material in any of the works installed by the Developer, provided that such fault or defect is called to the attention of the Developer in writing prior to one year from the date of the registration at the Land Titles Office.

(b) The approval of materials going into the works prior to their installation shall in no way relieve the Developer of liability for replacing or repairing the material if it proves to be defective or is damaged in installation.

4.3 As-Builts:

(a) Where any work is done by any person pursuant to the provision of this By-law on any road, sewerage, drainage, water works or any other works constructed within the highway right-of-way and/or any easements, as-built drawings of such works shall, upon the completion of the works, be filed in the Regional District. Every drawing shall be on an approved transparency showing the actual location of the works as-built.

4.4 Inspection of Works:

(a) Upon receipt of the Notification of Completion by the Subdivider, the agency having jurisdiction shall inspect the works and upon being satisfied that the works are completed according to the approved plans and specifications, he shall notify the Approving Officer in writing of the satisfactory completion of works, or where the works are not acceptable the agency having jurisdiction shall notify the Subdivider and Approving Officer of the deficiencies. Notification of satisfactory completion of works shall not be given until the works have been tested and ready to operate.

(b) The Approving Officer shall not give Final Approval to the subdivision until he has received approval in writing from the authorities having jurisdiction that the works have been satisfactorily completed.

SCHEDULE 'E': Water System

1.0 Design Parameters:

The parameters for design and construction of the water system shall meet all requirements of the American Water Works Association, and Ministry of Health. All water systems within the boundaries of the proposed subdivision must be designed by a professional engineer registered in the province of B.C.

2.0 Materials:

All materials to be incorporated in the water distribution system are subject to approval in writing by the authorized representative of the Utility.

3.0 Construction:

When the native excavated material is not suitable for pipe bedding or trench backfill, the Subdivider shall supply suitable materials acceptable to the authorized and representative of the Utility.

4.0 Testing:

Each section of water distribution piping installed by the Subdivider must be tested for pressure and leakage in accordance with the procedure as set out in the applicable A.W.W.A. Specifications and the allowable leakage shall be as provided in the specification. In the event that any section of the works installed do not meet the pressure and leakage tests, the Subdivider shall carry out repairs and retest until satisfactory tests have been obtained. The Subdivider shall advise the the Utility 24 hours in advance of the leakage test being applied and the Utility may elect to witness the test. All test data and leakage calculations shall be submitted to the Utility.

Disinfection and flushing of the water distribution system shall be carried out by the Subdivider in accordance with A.W.W.A. Specification C-601 prior to the system being placed in service. The utility shall be notified 24 hours in advance of the flushing operation to remove the disinfectant and a representative of the utility and representative from the Ministry of Health may be present to witness the procedure.

5.0 Installation of Water Mains:

All materials, including pipe fittings, shall be installed to applicable A.W.W.A. Standards for the installation of the particular type and class of material being used and to any additional requirements as set out by the materials manufacturer. All water mains shall be installed to a minimum depth of 2.1 meters from the crown of the pipe to the finished center line grade of the street. All pipe shall be bedded and hand backfilled and compacted to a depth of 300 mm above the crown of pipe as specified by the material manufacturer and the applicable A.W.W.A. standard for installation. Concrete thrust blocks shall be cast in place as shown on the drawings and shall be buried at least 150 mm into undisturbed ground on all sides and bottom of the trench. Concrete quality shall be stated in the concrete specifications and approved by the Utility before installation.

6.0 Water Pipe:

Water mains shall be designed for domestic cold water service with working pressures of 1034.2 Kilo Pascals, unless other working pressures are specifically called for, and for 2 meters bury with at least AASHO H20 loading (subject to metric conversion).

In the Thornhill Water System, water mains shall be ductile iron pipe in accordance with A.W.W.A. Specification C151 and the following supplementary data:

(a) The supplier shall submit an affidavit of compliance with the standard specifications and supplementary data.
(b) All pipe supplied shall bear the underwriter's label.
(c) Joints shall be of rubber gasket type and shall be in accordance with A.W.W.A. Specification C111, with conductivity connectors to enable electrical thawing.
(d) All pipes shall have bitumenous protective coating and cathodic protection.

7.0 Cast Iron Fittings:

Fittings shall be in accordance with A.W.W.A. Specifications C110. All fittings shall be either flanged or have rubber gasket joints. Fittings shall have a bituminous protective coating suitable for use with potable cold water.

8.0 Stand Pipes:

Stand pipes shall be self-draining suitable for 2.1 m bury and have one male outlet for 63 mm diameter fire hose, complete with cap. Stem and drain seals shall be resilient "O-Ring". The inlet shall be 63 mm National Pipe Thread. Stand pipe valves shall open when the hand wheel is turned counterclockwise.

9.0 Valves:

(a) Valves shall be Terminal City or Canada Valve solid wedge or double disc, non-rising stem gate valves in accordance with A.W.W.A. Specification C500 and the following supplementary information.

(i) Ends
Valve ends shall be flanged where specified "F", in accordance with Section 9.2 of A.W.W.A. Specification C500 or shall have a hub. Valves shall be provided with lugs for 19 mm diameter harness bars where noted.

(ii) Stem Seal
Stem seal shall be resilient "O-Ring".

(iii) Wrench Nuts
Valves shall be fitted with wrench nuts in accordance with Section 19 of A.W.W.A. Specification C500.

(iv) Opening Direction
Valves shall open when wrench nut is turned counterclockwise.

(v) Bypasses
Bypasses are not required for 300 mm diameter valves and smaller; 355 mm diameter to 500 mm diameter valves shall have a 75 mm diameter bypass.

(vi) Valve Position
Valves shall be designed for vertical operation.

(vii) Two valve markers shall be required to mark each valve.

(b) Tapping valves shall be in accordance with Section 4.8.9(a) above and shall have oversized seat rings to permit the use of cutters for the full nominal size of the tapping valves.

10.0 Tapping Sleeves:

Tapping sleeves shall be designed to withstand working pressures of 1034.2 Kilo Pascals. Tapping sleeves shall completely seal the length of pipe within the sleeve utilizing resilient rubber rings or gaskets and shall be equal to a Smith Blair figure 623 tapping sleeve.

11.0 Fire Hydrants:

(a) Fire hydrants shall be complete as specified in the materials specifications and shall be installed as shown on the attached standard drawing.
(b) Hydrants in residential subdivisions shall be spaced a maximum of 150 m apart and 110 m apart in commercial and industrial areas or according to National Fire Service Act, whichever is more stringent.
(c) All hydrant sets shall be isolated from the water main by a gate valve.
(d) Hydrants shall be compression type and shall be Terminal City C-71P or Canada Valve Century and shall conform with A.W.W.A. Specification C502 and shall be flanged at the ground line. Hydrants shall have two hose nozzles and one pumper nozzle complete with caps. Hose nozzles shall be 63 mm in diameter and pumper nozzles 100 mm in diameter. Nozzle threads shall conform with British Columbia Fire Hose Thread Specifications. Hydrants shall have a 2.1 meter bury as measured from the ground flange to the crown of the connecting pipe. All hydrant bells shall be equipped with lugs for 19 mm diameter tie rods. Hydrants shall be painted red. Hydrant stems shall be turned counterclockwise to open. Stem seals shall be resilient "O-Ring". Hydrant extensions shall be supplied complete with nuts, bolts, flange gaskets, operator extension, and coupling.
(e) A hydrant access path shall be to all hydrants as indicated on the attached drawing.
(f) If required by the the Utility, a hydrant barrier shall be constructed in accordance with the attached drawing.

12.0 Water Service Connections:

(a) Water service tapping shall be through a corporation stop with a properly formed goose neck and shall also include a self-draining curb stop and service box as shown on the attached service connection standard.
(b) The minimum depth of the water service connection from the water main to the property line shall be 2.1 meters below finished gutter elevation.
(c) All materials to be incorporated in the water services shall be approved in writing by the authorized representative of the Utility.

FIRE HYDRANT ASSEMBLY

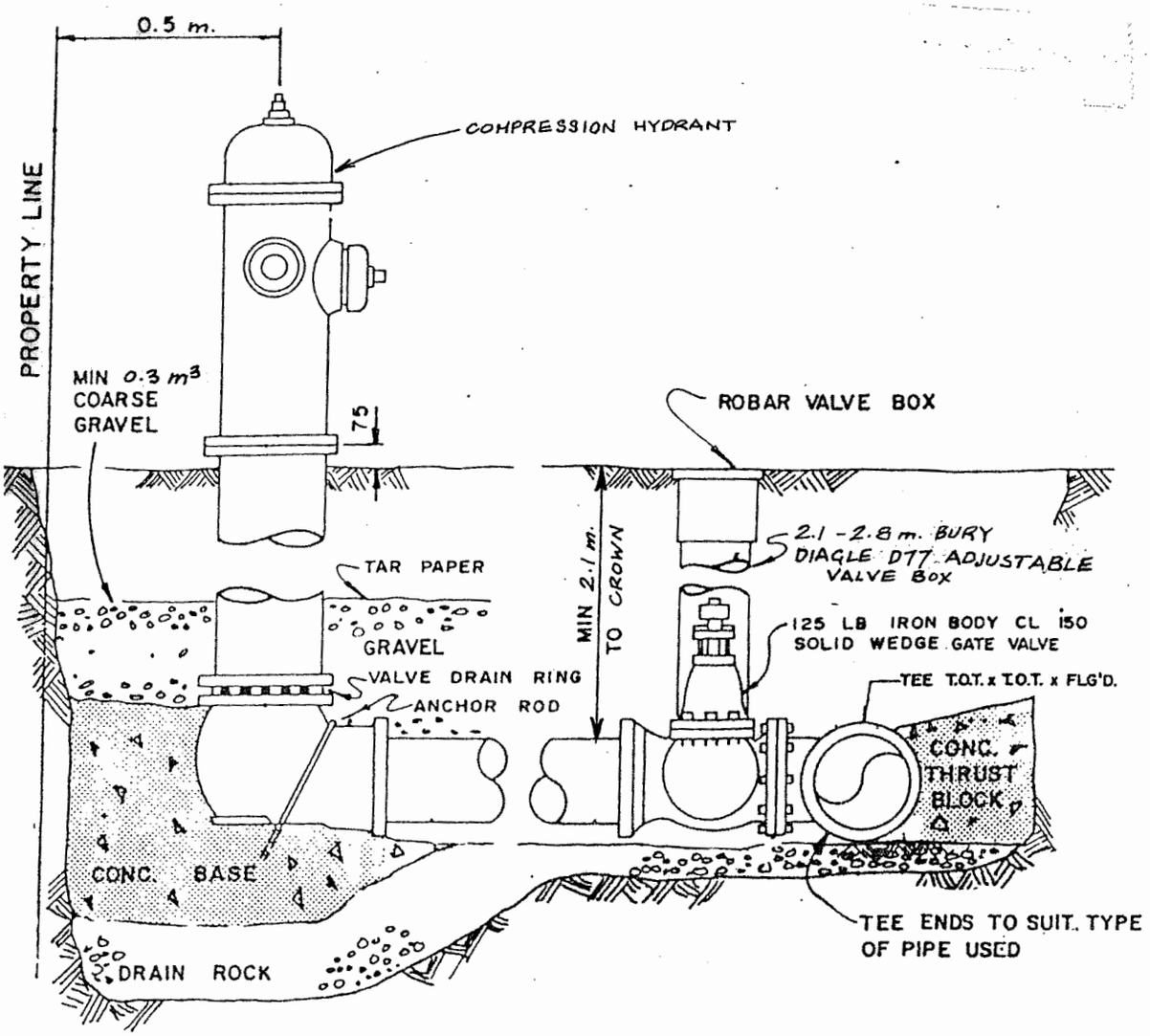

EXTENTION SERVICE BOX DETAIL

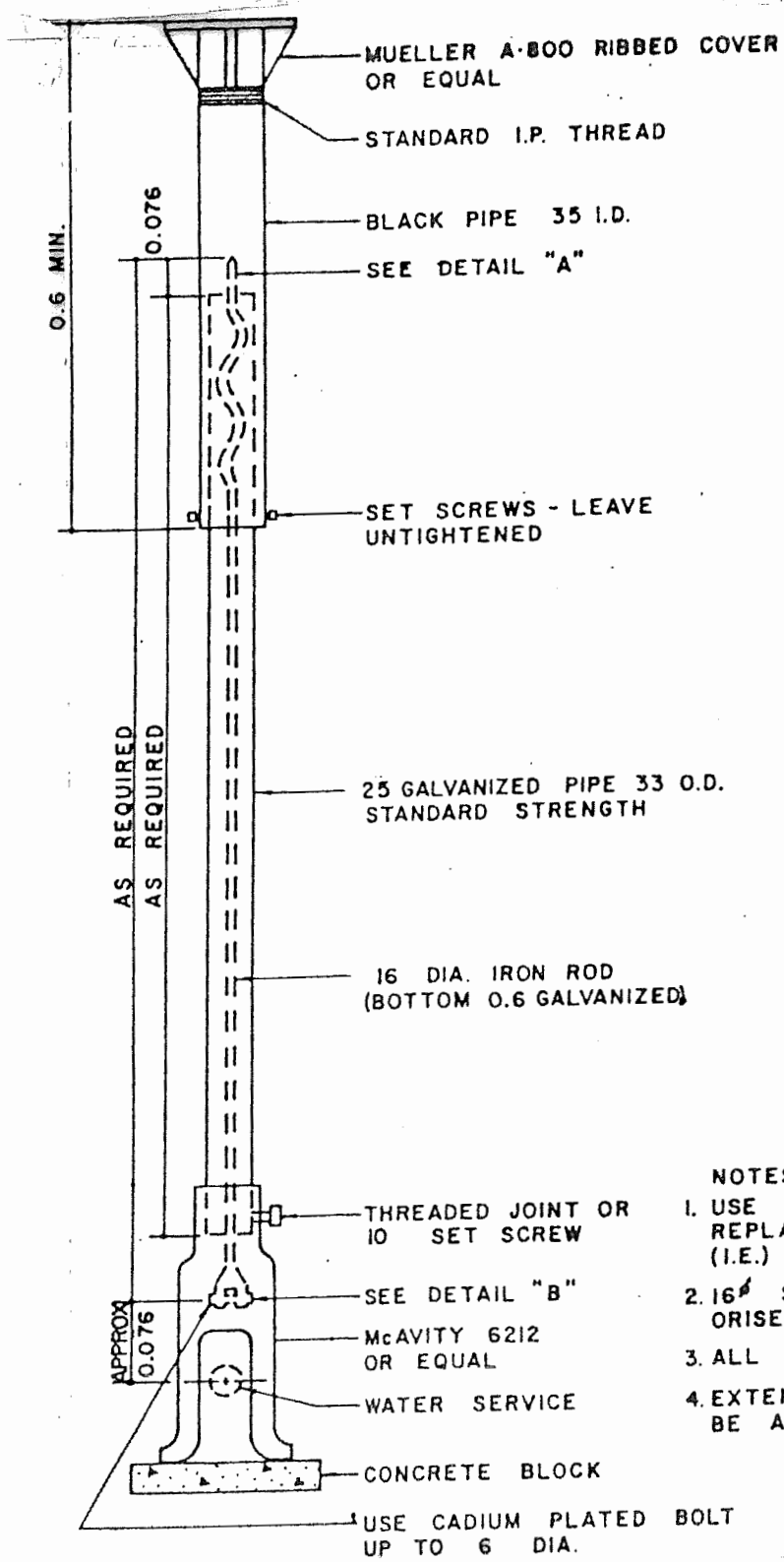

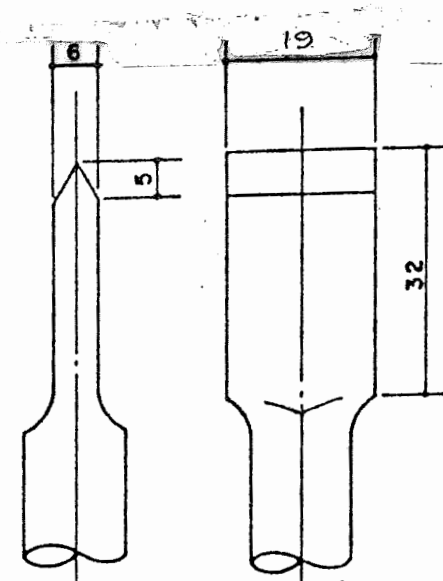

DETAIL "A"

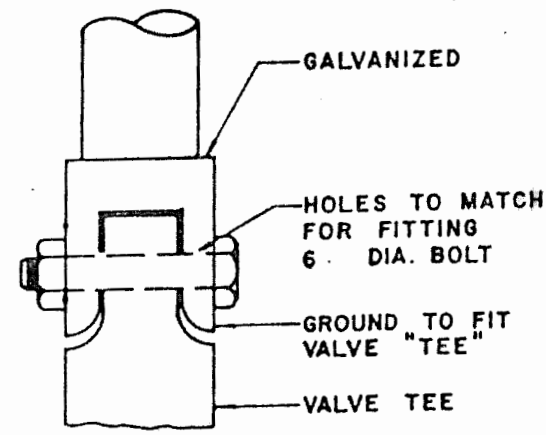

DETAIL "B"

NOTES:

1. USE 19ø STRAIGHT SERVICE RODS WHEN REPLACEMENT OF 16ø ROD IS REQUIRED (I.E.) FOR OLD CURB COCKS
2. 16ø SERVICE RODS TO BE USED FOR ORISEAL CURB COCKS.
3. ALL DIMENSIONS BASED ON 2.1 BURY
4. EXTENSION SERVICE BOX MUST BE ADJUSTABLE

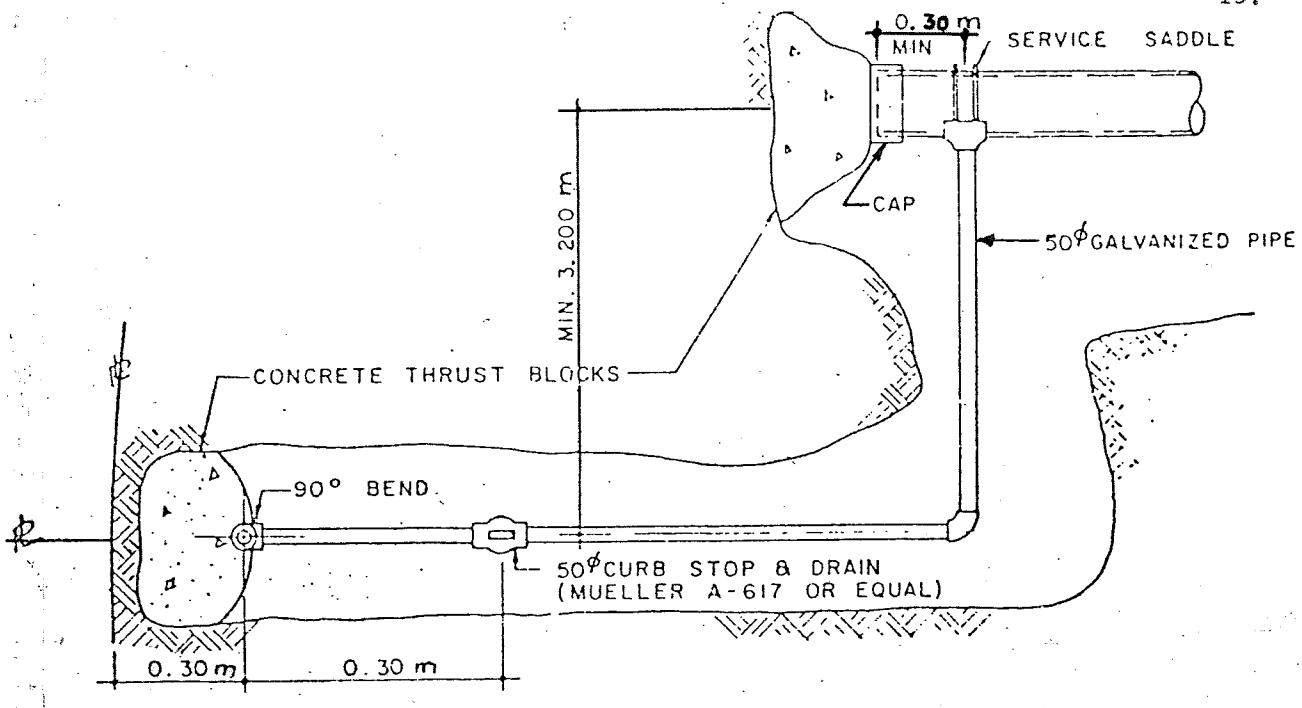

PLAN

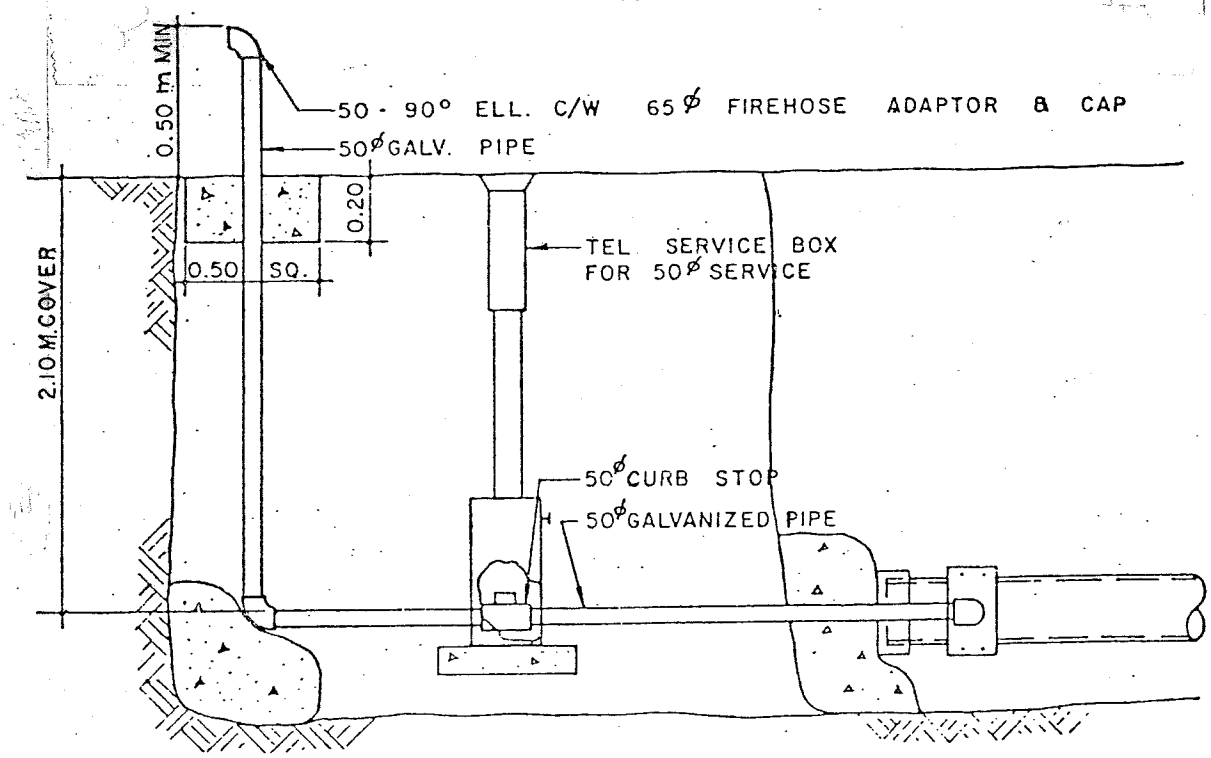

ELEVATION

BLOW-OFF ASSEMBLY

n.t.s.

WATER SERVICE CONNECTION DETAIL

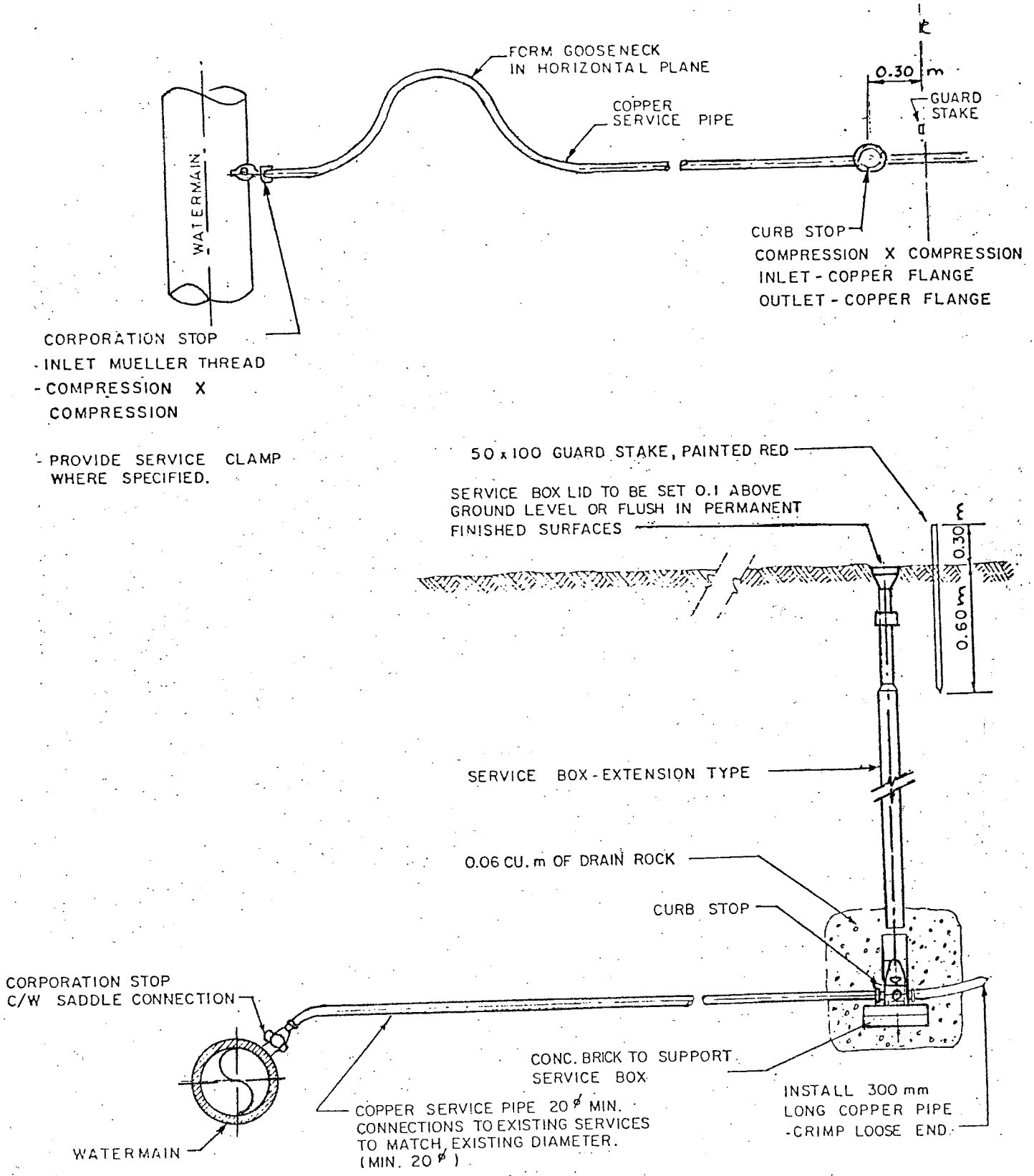

VALVE MARKER

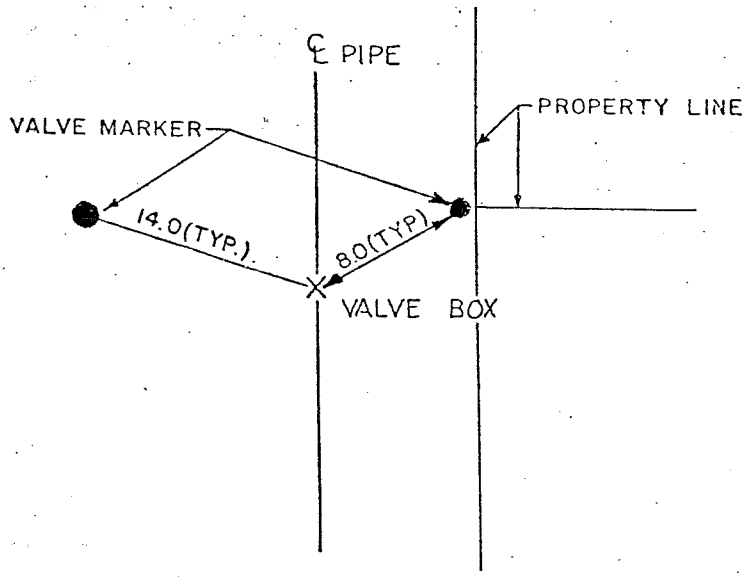

PLAN

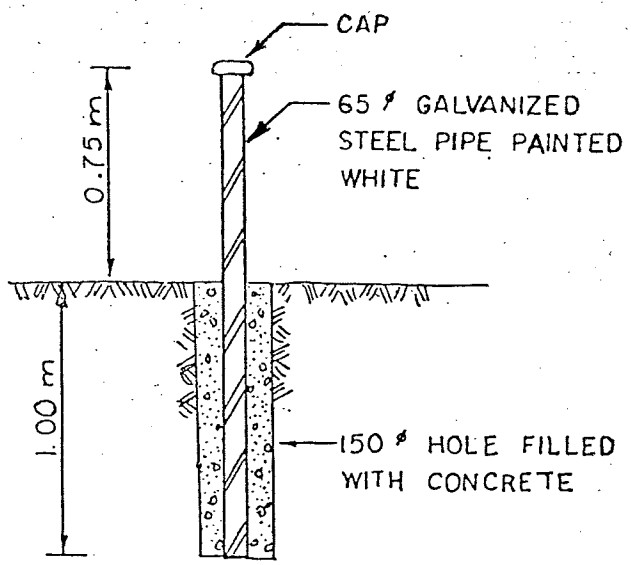

SECTION

N.T.S.

NOTE:
1. TWO VALVE MARKERS ARE REQUIRED TO LOCATE EACH VALVE
2. VALVE MARKERS ARE ONLY REQUIRED WHEN VALVES CAN NOT BE EASILY FOUND FROM PROPERTY PINS (AS DIRECTED BY THE ENGINEER).

HYDRANT ACCESS PATH

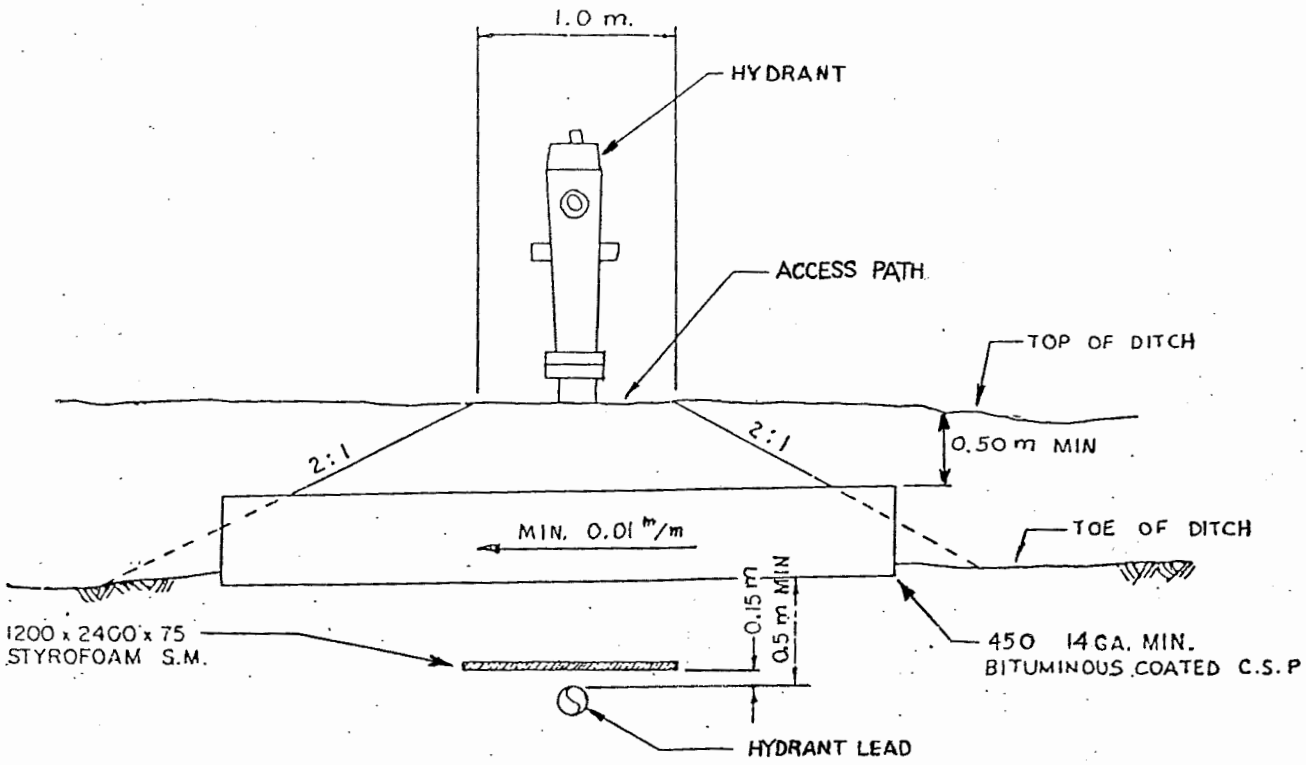

ELEVATION

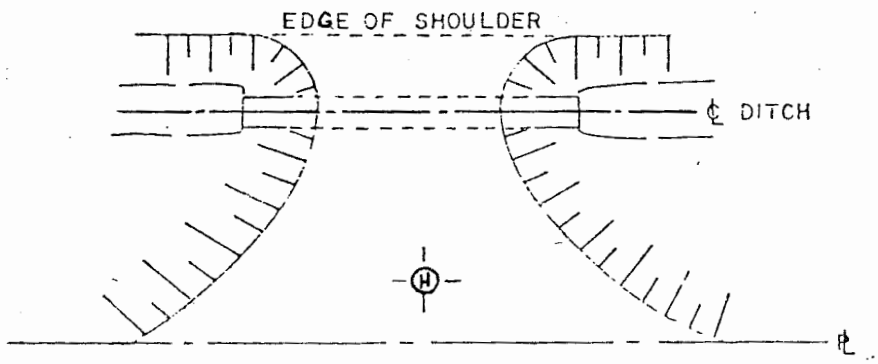

PLAN

HYDRANT ACCESS PATH
n.t.s.

HYDRANT BARRIER

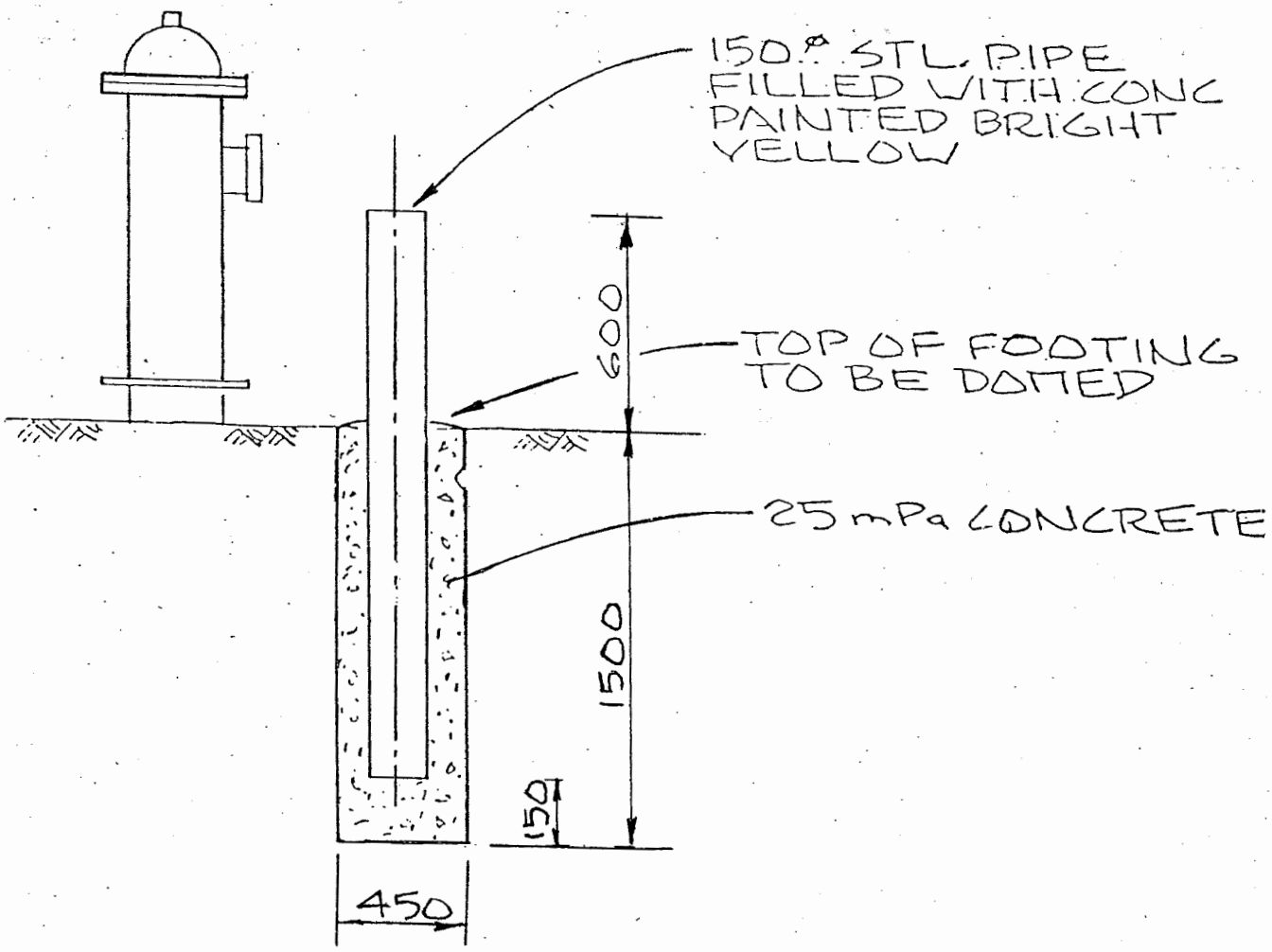

ELEVATION

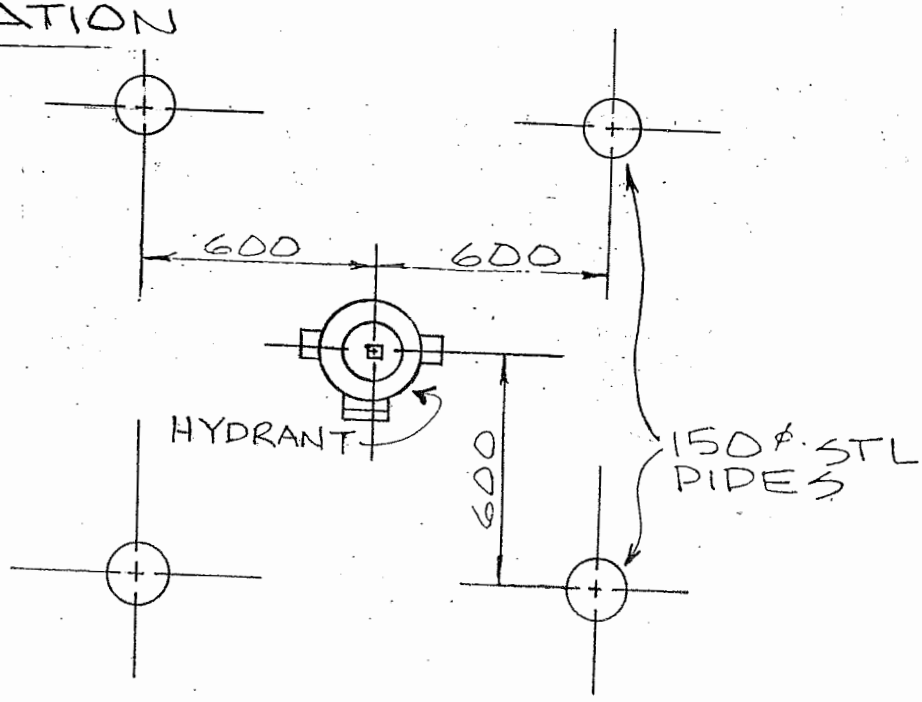

PLAN